INTRODUCTION

The SP-lined sleeve is a critical mechanical component used for torque transmission between mating shafts. To ensure structural integrity under applied torque, Finite Element Analysis (FEA) is carried out using CATIA V5 – Generative Structural Analysis (GSA). The objective of this analysis is to evaluate stress distribution and deformation under static loading conditions.

GEOMETRY MODELLING (PART DESIGN)

The geometric model of the SP-lined sleeve was created in **CATIA V5 Part Design Workbench** with accurate dimensions as per design requirements.

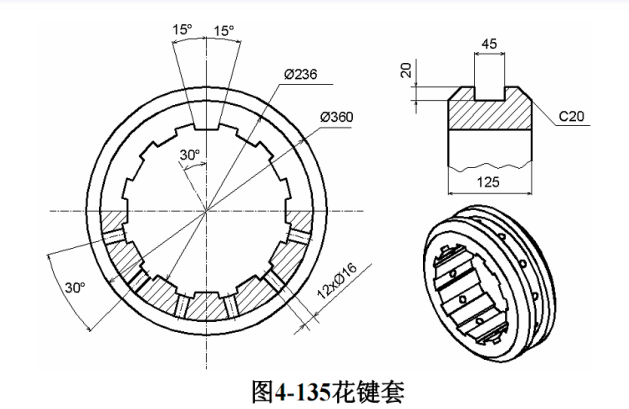

Figure – Draft view

1. **Creation of Base Geometry**

i. CATIA V5 was opened and Part Design workbench was selected.
ii. A new part file was created.
iii. Sketch 01 was created on the ZX plane, representing the cross-sectional profile of the sleeve.
iv. The sketch was fully constrained to ensure geometric stability.

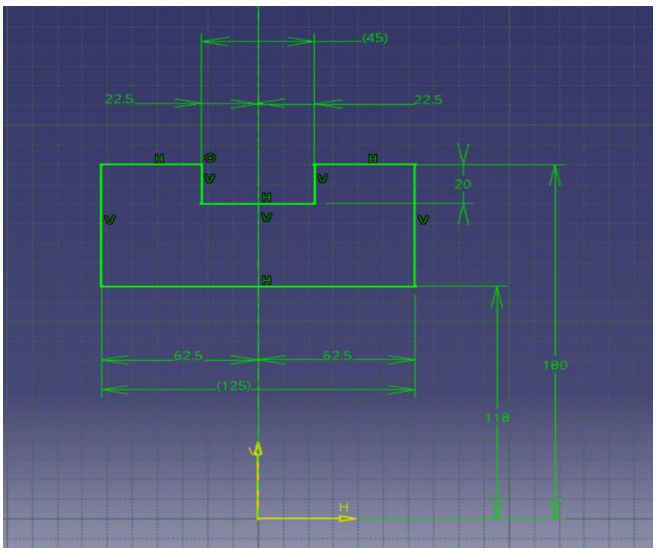

2. **Shaft Feature**

i. The sketch revolved using the Shaft feature to generate a hollow cylindrical sleeve.
ii. A revolution angle of 360° was used.
iii. This feature formed the basic 3D geometry of the sleeve.

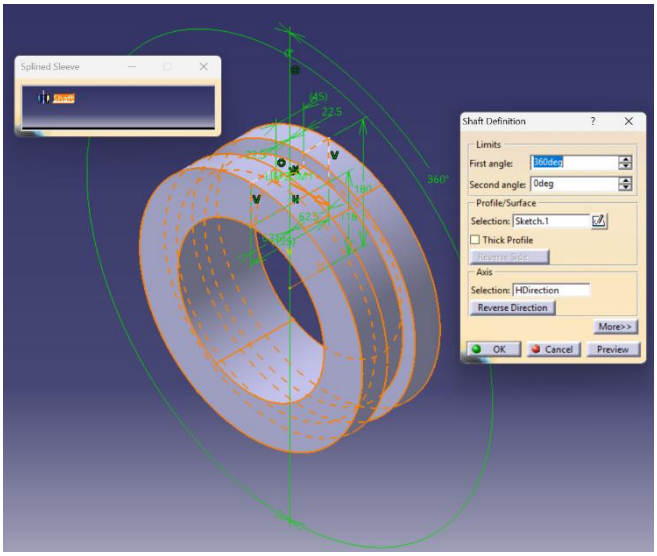

3. **Chamfer**

i. Chamfer was applied to selected edges using Dress-Up Features → Chamfer.
ii. Chamfering helps reduce sharp edges and represents realistic manufacturing conditions.

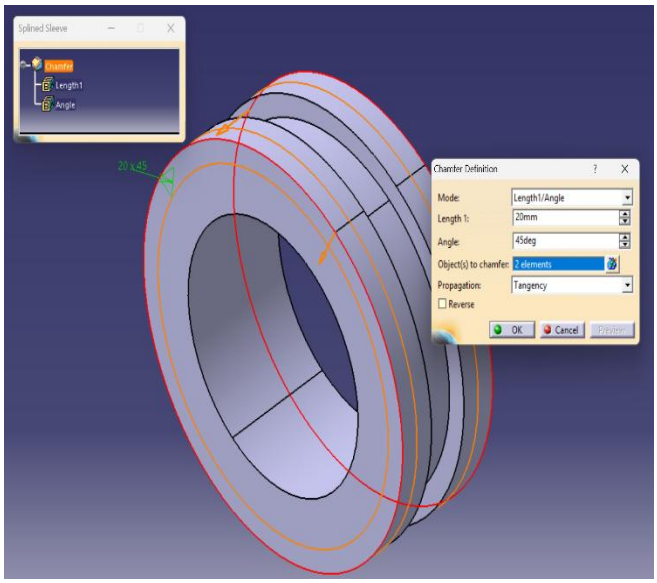

4. Internal Spline Creation

i. Sketch 02 was created on the front face of the sleeve.
ii. The spline tooth profile was sketched accurately.
iii. A Pocket operation was performed to remove material and create spline teeth.

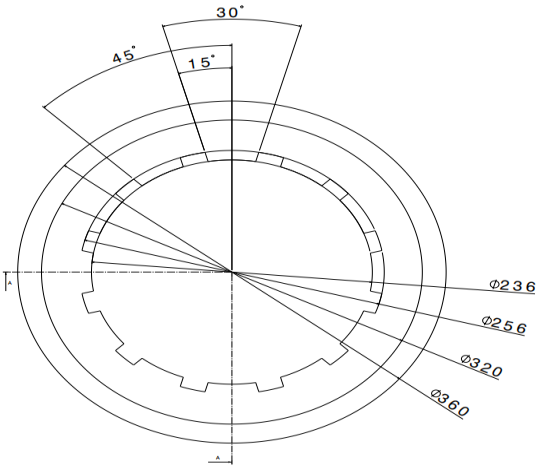

Figure - Sketch 02

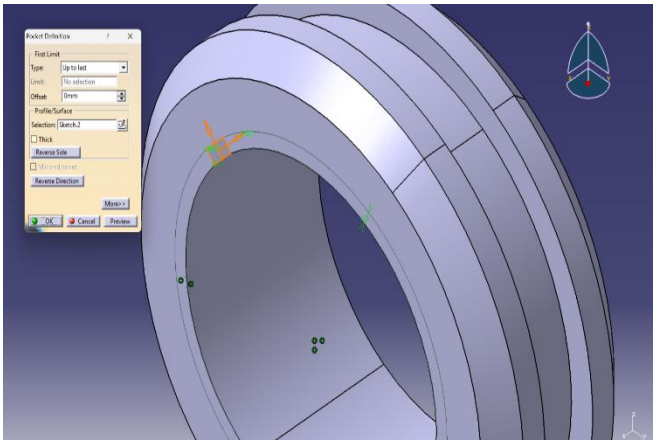

5. Circular Pattern

i. The pocket feature was repeated uniformly around the sleeve axis using Circular Pattern.
ii. This created the required number of spline teeth.

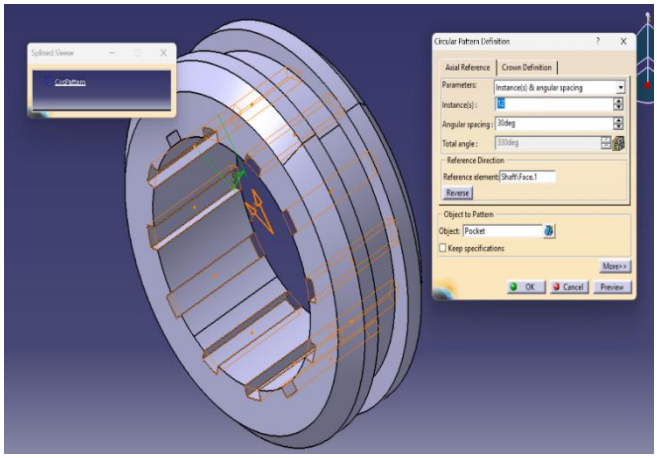

6. Hole Creation

i. Holes were created using the Hole feature.
ii. Hole dimensions and positions were defined precisely.
iii. The holes were patterned circumferentially using Circular Pattern.

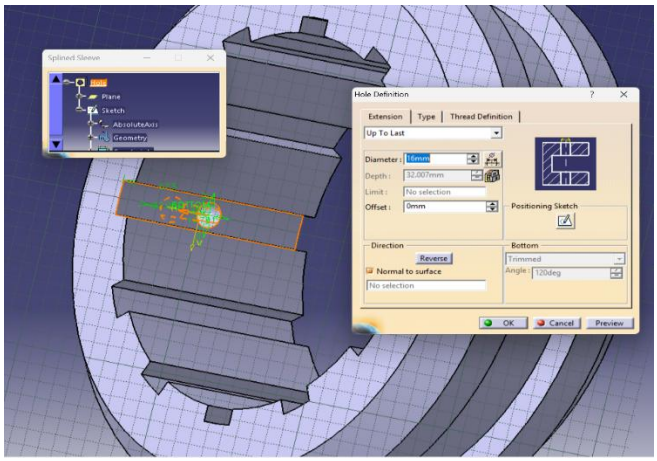

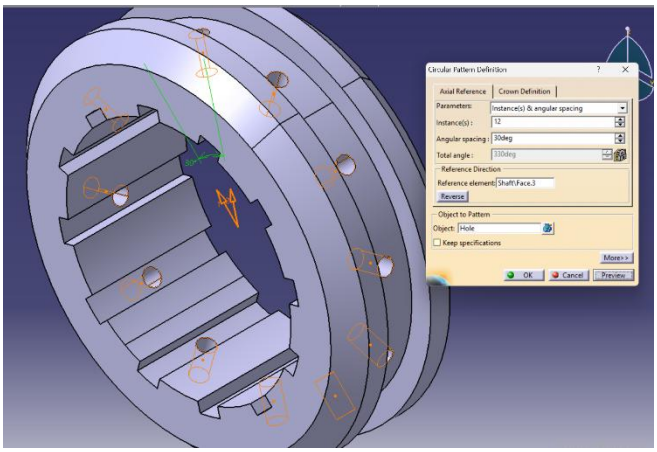

7. Final Geometry Validation

i. The completed 3D model was visually inspected.
ii. Geometric consistency was verified before proceeding to analysis.

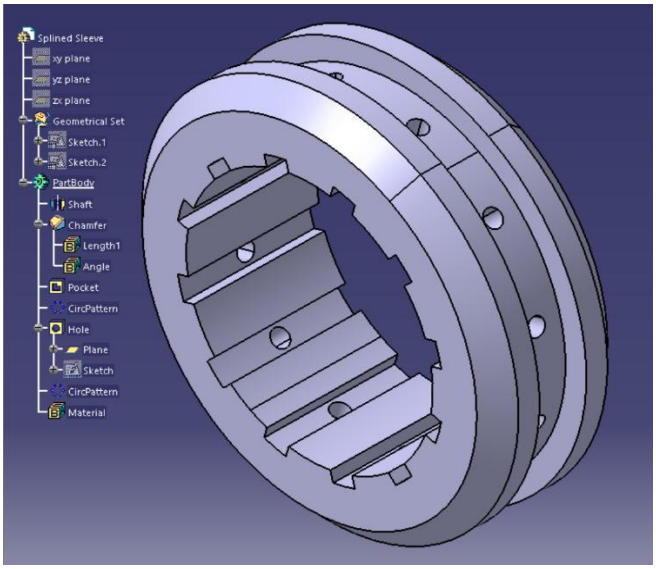

Figure - 3D Part Model View

FINITE ELEMENT ANALYSIS (GENERATIVE STRUCTURAL ANALYSIS

1. Analysis Type

i. The model was transferred to Generative Structural Analysis workbench.
ii. A Static Analysis case was selected since the applied loads are constant.

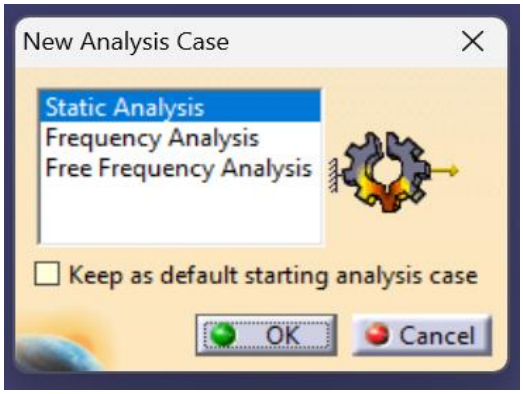

2. Material Assignment

i. Material was assigned from the CATIA Material Library.
ii. Steel was selected and applied to the entire sleeve.
iii. Material properties such as Young's modulus and Poisson's ratio were automatically assigned.

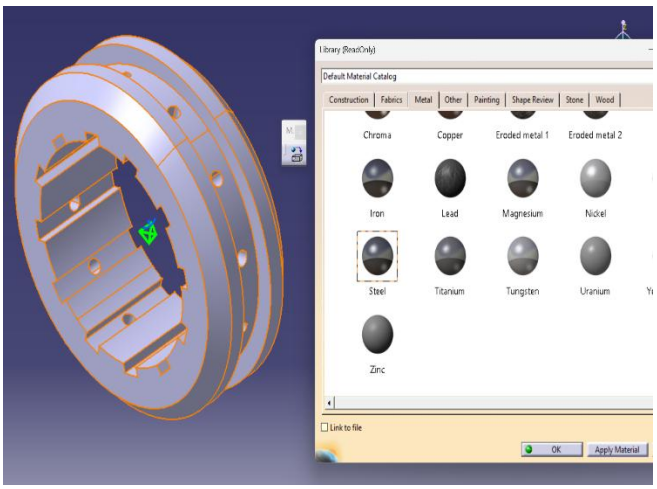

3. Meshing

i. The model was discretized using tetrahedral finite elements.
ii. Mesh size and element type were selected appropriately.
iii. Mesh refinement was ensured in critical regions such as splined teeth and holes.

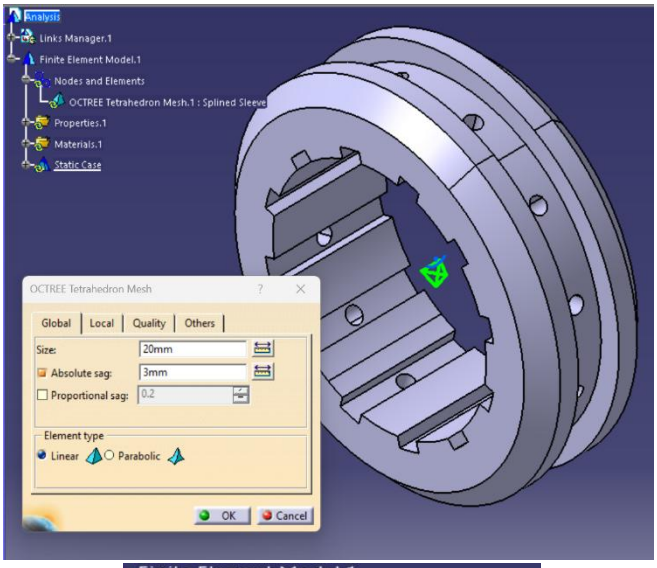

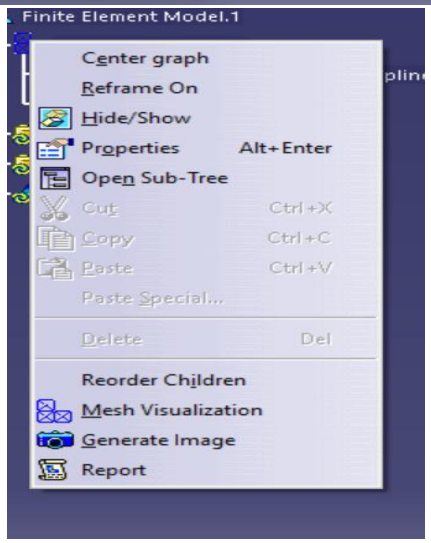

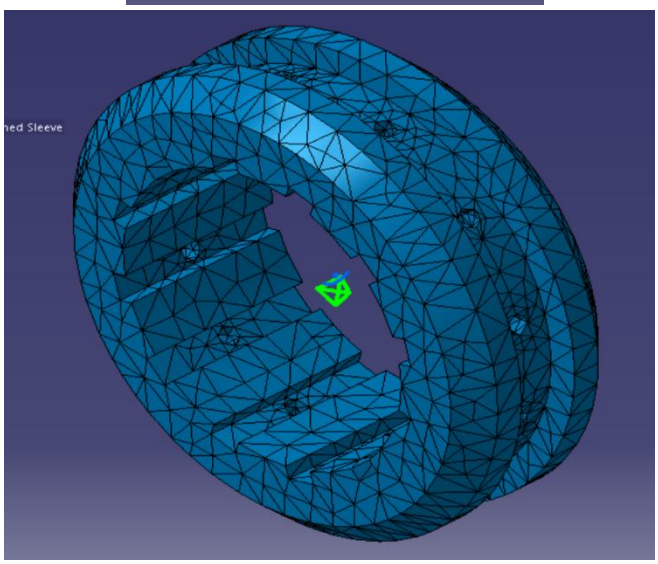

Figure – Meshing Model

4. Boundary Conditions

i. Boundary conditions were applied using Restraints → Clamp.
ii. One end surface of the sleeve was fully constrained to simulate fixed support.
iii. All translational and rotational degrees of freedom were restricted.

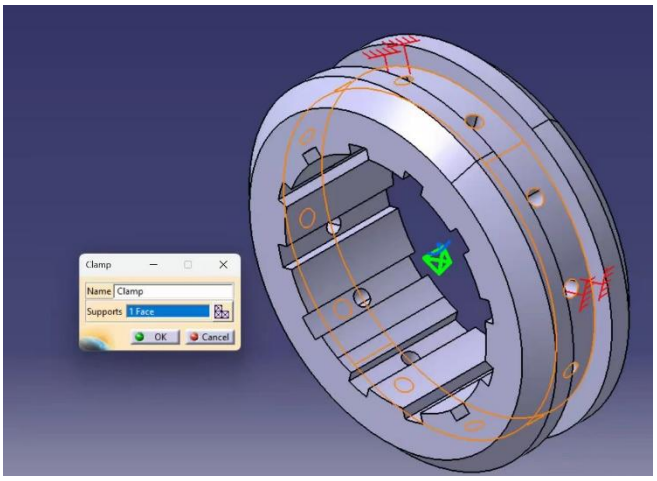

5. Load Application

i. Torque was applied using Loads → Moment.
ii. The moment was applied on the inner spline faces.
iii. The torque value was entered as per design loading conditions.

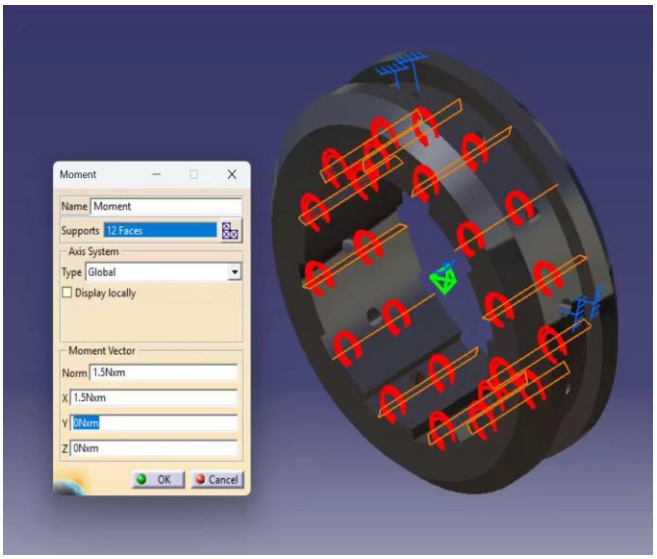

6. Solution

The analysis was executed using Compute → All.

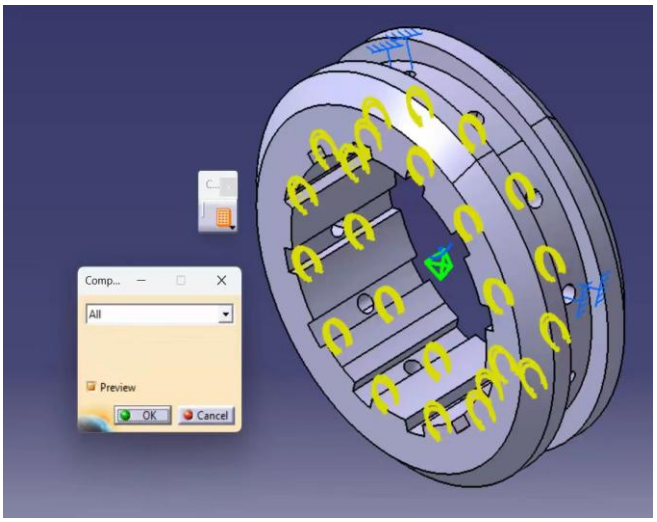

RESULTS

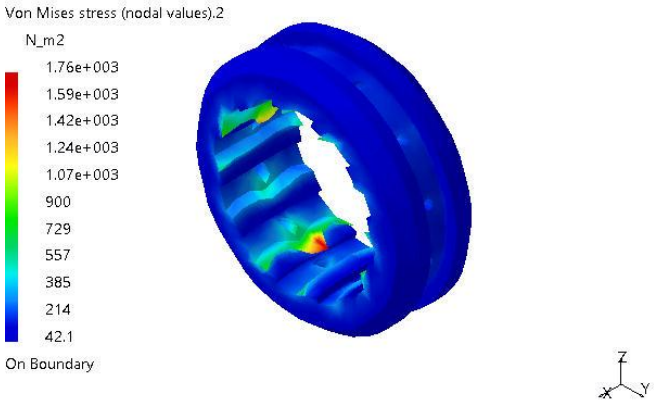

Figure – Von mises stress